45 BELLGROVE ROAD, DA16 3QB

Approx. Gross Internal Area *
3696 Ft ² - 343.37 M ²

Key :

CH - Ceiling Height
SH - Sill Height
WH - Window Height
DH - Door Height

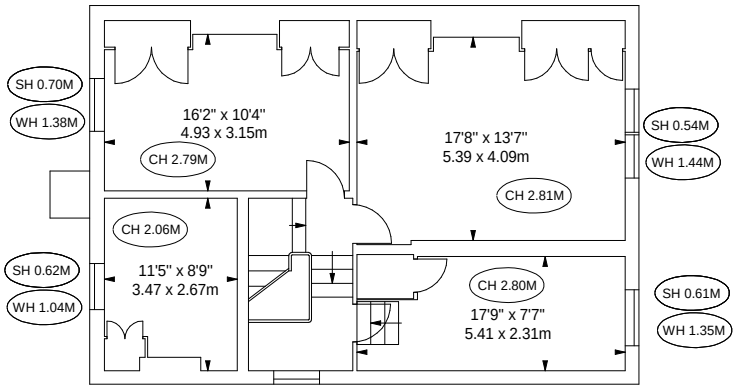

Second Floor

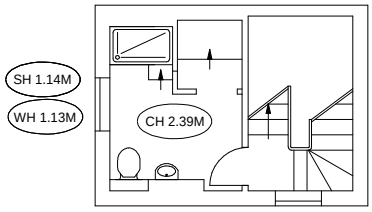

First Floor Half Landing

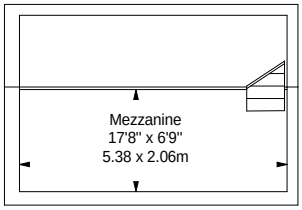

Mezzanine

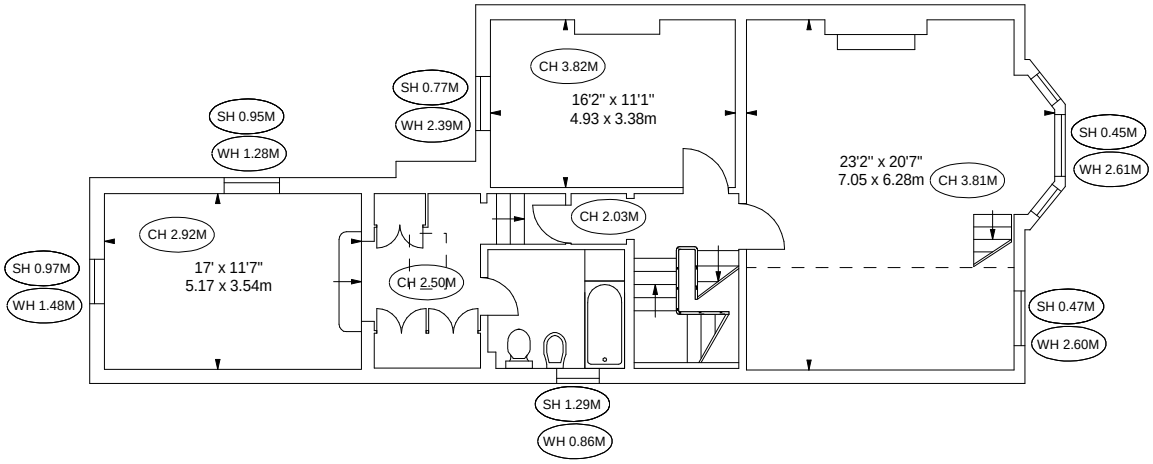

First Floor

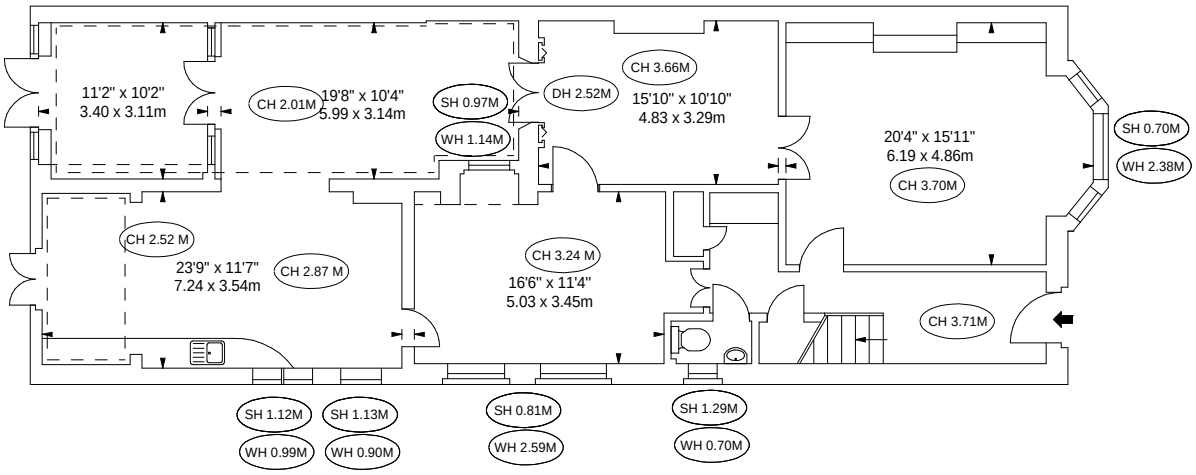

Ground Floor

Illustration For Identification Purposes Only. Not to Scale
* As Defined by RICS - Code of Measuring Practice